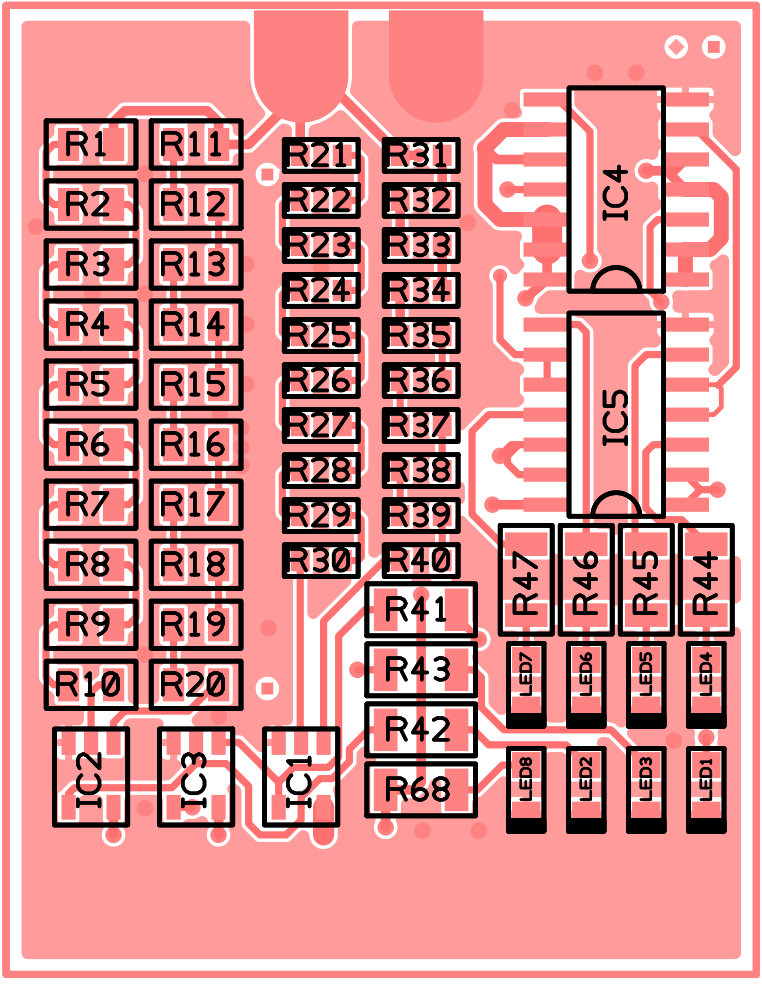
R1
R2
R3
R4
R5
R6
R7
R8
R9
R10
R11
R12
R13
R14
R15
R16
R17
R18
R19
R20
R21
R22
R23
R24
R25
R26
R27
R28
R29
R30
R31
R32
R33
R34
R35
R36
R37
R38
R39
R40
R41
R43
R42
R68
IC4
IC5
R47
R46
R45
R44
LED7
LED6
LED5
LED4
LED8
LED2
LED3
LED1
IC2
IC3
IC1