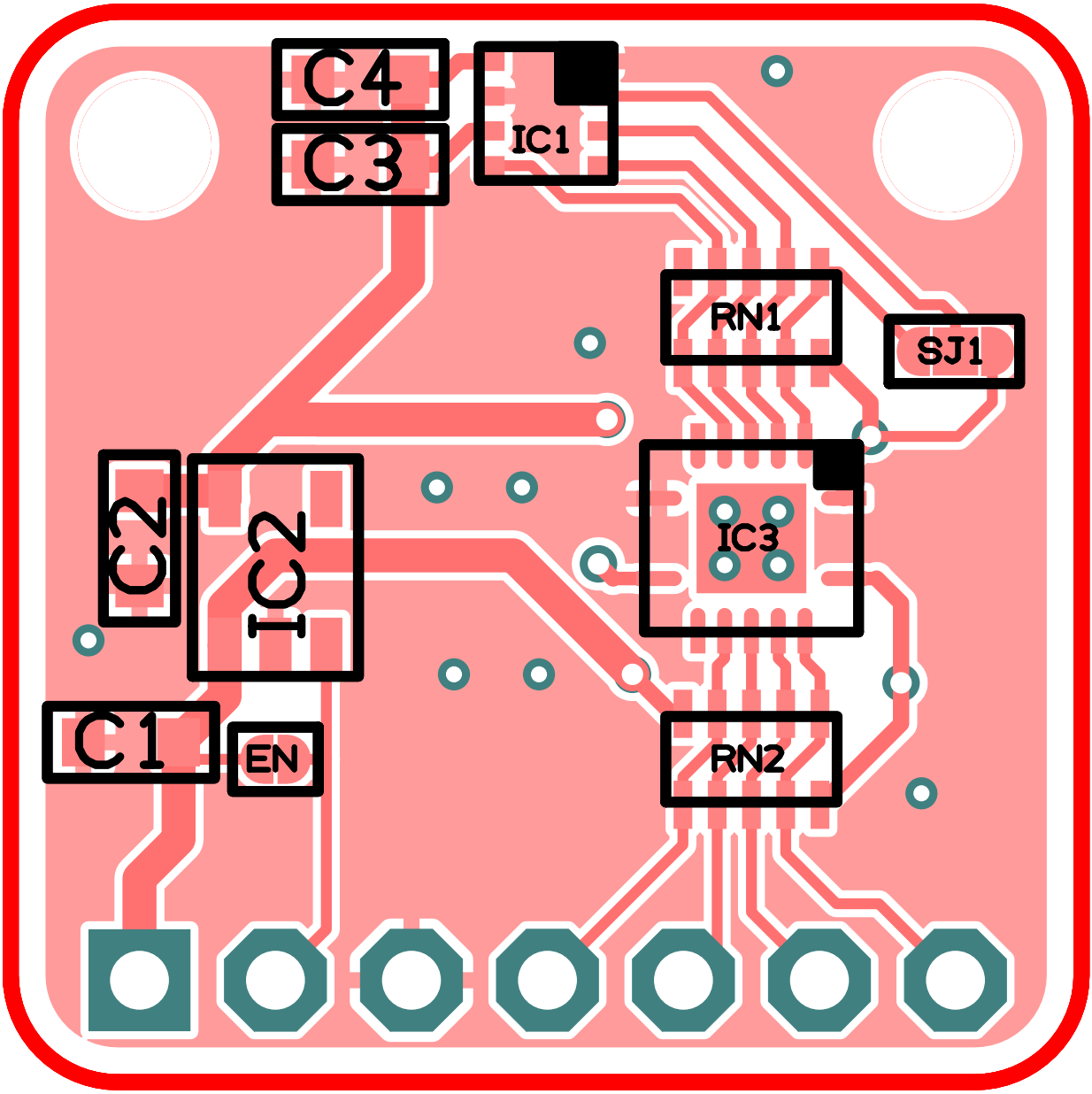
C4
C3
IC1
RN1
SJ1
C2
IC2
IC3
C1
EN
RN2

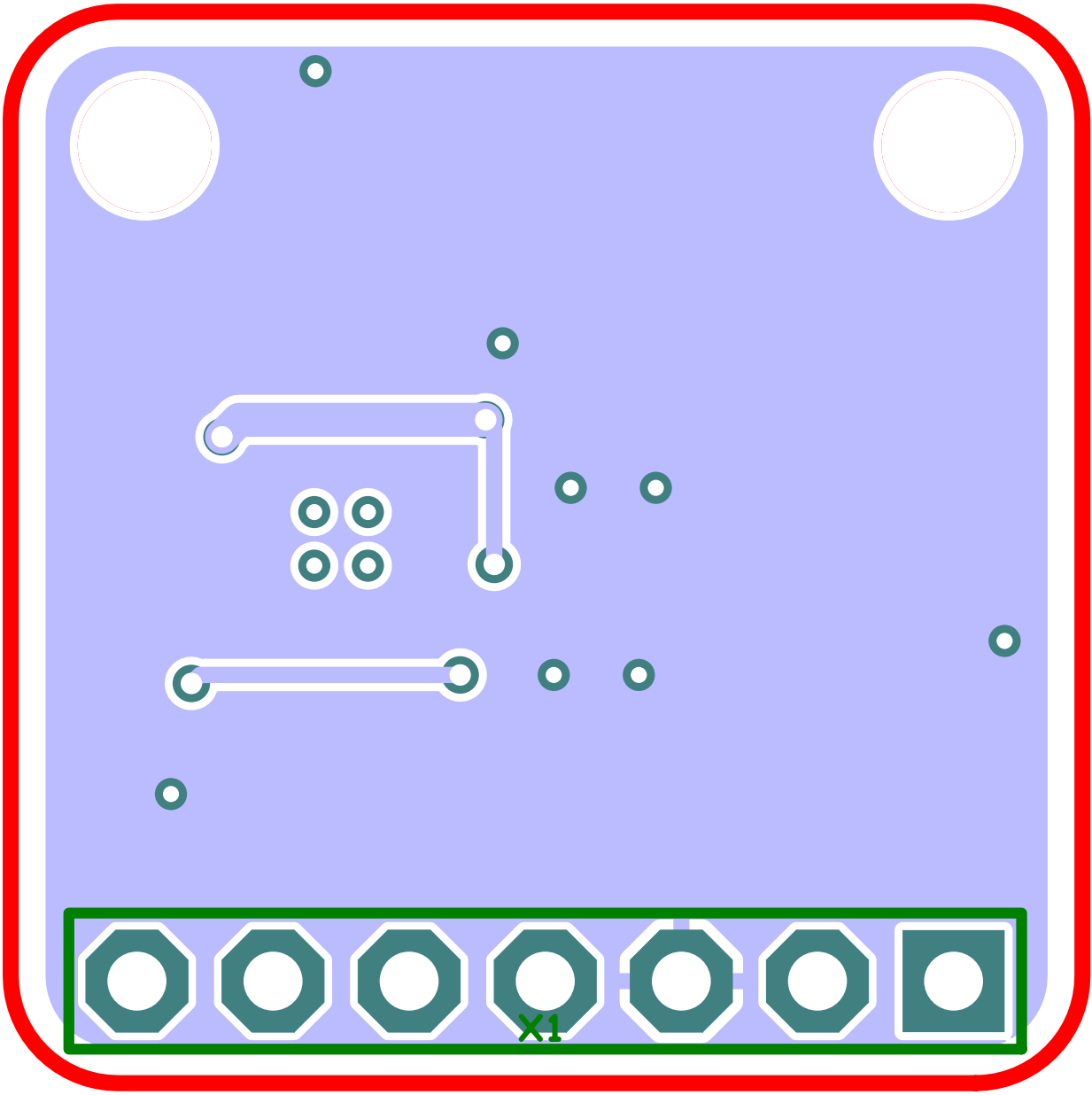
X1